RNA Automation Ltd
Feeding Technology for Industrial Automation

Spare parts list

Bowl Feeders

Issued: 2021 / 05.09.2019 SJ
Spare Parts List | Rhein-Nadel Automation GmbH

Content

1. Certificates 3
2. Bowl feeders Type SRC-N 160 5
3. Bowl feeders Type SRC-N 200 7
4. Bowl feeders Type SRC-N 250 9
5. Bowl feeders Type SRC-N 400 13
6. Bowl feeders Type SRC-N 630 17
7. Bowl feeders Type SRC-N 800-1 21
8. Bowl feeders Type SRHL 400 23

1. Certificates

Certificate

TÜVRheinland®

Certificate no. CU 72190034 01

License Holder:
Rhein-Nadel Automation GmbH
Reichsweg 19-23
52068 Aachen
Germany

Manufacturing Plant:
Rhein-Nadel Automation GmbH
Reichsweg 19-23
52068 Aachen
Germany

Test report no.: USA- 31881700 001

Client Reference: Mr. B. Borggreve

Tested to: UL 1004-1:2012 R8.18
CSA C22.2 No. 100-14

Certified Product: Vibration conveyors and linear conveyors

License Fee - Units

The products were assessed positively according to
ASME B20.1-2015. 7
Model Designations:
1) SRC-N x-y z; 2) SRHL 400-y z; 3) GL-01, GL 1;
4) SLA 175-250; 5) SLA 400-u; 6) SLC 500; 7) SLF 1000;
8) SLF v-w; 9) SLG 820-1200; 10) SLG v-1500;
11) SLL 175-175; 12) SLL 175-250; 13) SLL 400-u;
14) SLL 800-m; 15) SLL 800-n; 16) SLL 804-m; 17) SLL 804-o
18) SLL 804Z-m; 19) SLL 804Z-o; 20) SLL 804Z-p; 21) QLF
For explanation of abbreviations and further information
refer to next page(s).

7

Appendix: 1, 1-6

Licensed Test mark:

TÜVRheinland
c us

Date of Issue (day/mo/yr)
23/01/2019

TÜV Rheinland of North America, Inc., 12 Commerce Road, Newton, CT 06470, Tel (203) 426-0888 Fax (203) 426-4009

15001 02.14 © TÜV, TUEV and TÜV are registered trademarks. Utilisation and application requires prior approval.

ZERTIFIKAT

RNA
Rhein-Nadel Automation GmbH

ISO 9001:2015

DEKRA Certification GmbH bescheinigt hiermit, dass das Unternehmen

Rhein-Nadel Automation GmbH

Zertifizierter Bereich: Entwicklung, Konstruktion, Fertigung und Vertrieb von Schwingförderern, Förderbändern, Zuführ- und Transportanlagen sowie Sicherheitsgefäßen

Zertifizierter Standort: D-52068 Aachen, Reichsweg 19-23

Zertifizierter Bereich: Konstruktion, Fertigung und Vertrieb von Schwingförderern, Förderbändern, Zuführ- und Transportanlagen sowie Sicherheitsgefäßen

Zertifizierte Standorte: D-58511 Lüdenscheid, Nottebohmstr. 57
D-84030 Ergolding, Ahornstraße 122

PSA Zuführtechnik GmbH-
Ein Unternehmen der RNA Gruppe

Zertifizierter Bereich: Konstruktion, Fertigung und Vertrieb von Schwingförderern, Förderbändern, Zuführ- und Transportanlagen sowie Sicherheitsgefäßen

Zertifizierter Standort:
D-74523 Schwäbisch-Hall, Dr. Jakob-Berlinger-Weg 1

ein Qualitätsmanagementsystem entsprechend der oben genannten Norm eingeführt hat und aufrechterhält. Der Nachweis wurde mit Auditbericht-Nr. A18041122 erbracht.

Dieses Zertifikat ist gültig vom 12.09.2018 bis 31.08.2021

Zertifikats Registrier-Nr.: 40697348/7

DEKRA

Lothar Wernofen
DEKRA Certification GmbH Stuttgart; 12.09.2018

DAkkS

DEKRA Certification GmbH * Handwerkstraße 15 * D-70565 Stuttgart * www.dekra-certification.de

Seite 1 von 1

2. Bowl Feeders Type SRC-N 160

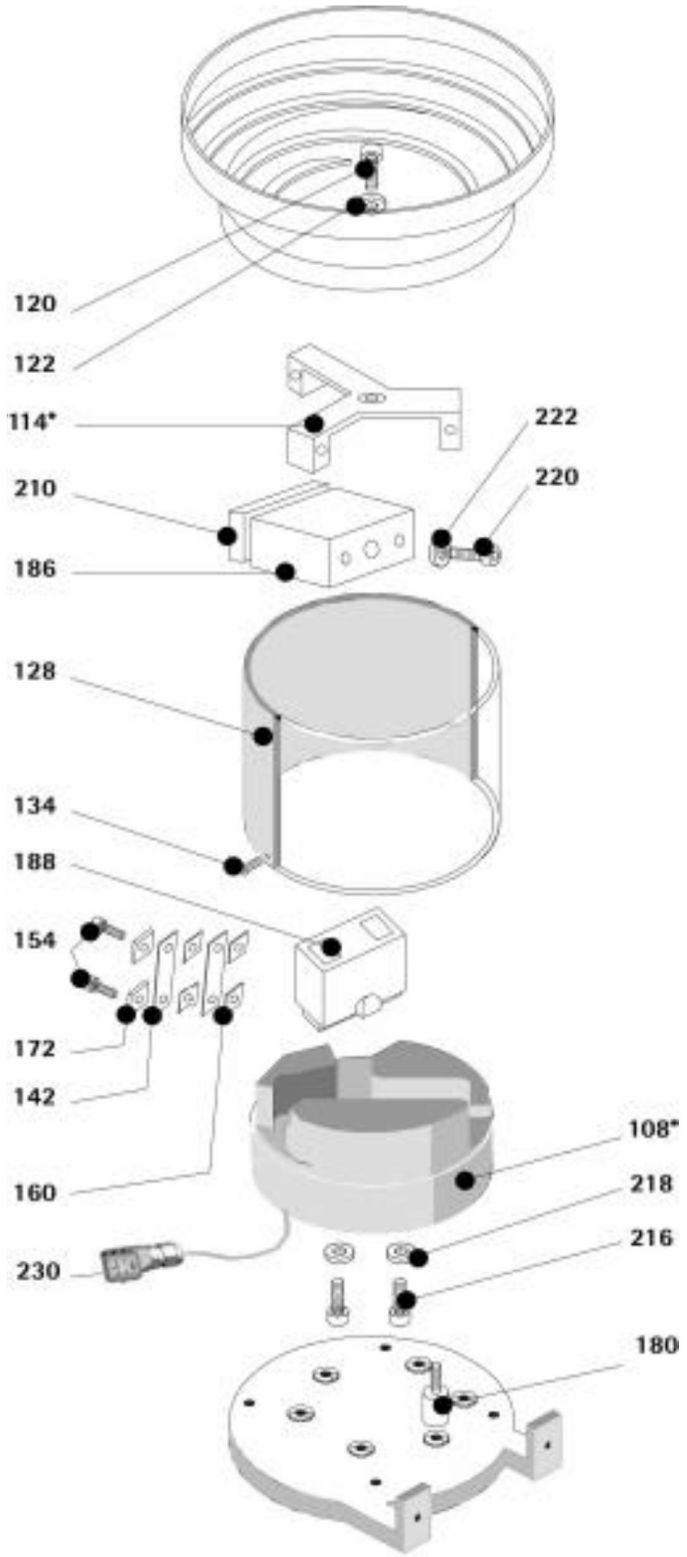

*Please state the feed direction for orders of bowls and drive units.

Parts List Type SRC-N 160

Pos	Designation
108*	Counter-mass
114*	Vibrator Top Casting
120	cyl. Screw M8 x 16
122	Spring Washer
128	Metal Cover
134	cyl. Screw M5 x 10
142	Leaf Spring Assembly
154	cyl. Screw M8 x 25
160	Endplate

Pos	Designation
172	Clamping Plate
180	Shock Absorber
186	Armature
188	Magnet / Coil
210	Shims
216	cyl. Screw M5 x 30
218	Spring Washer
220	cyl. Screw M5 x 35
222	Washer
230	Plug

3. Bowl Feeders Type SRC-N 200

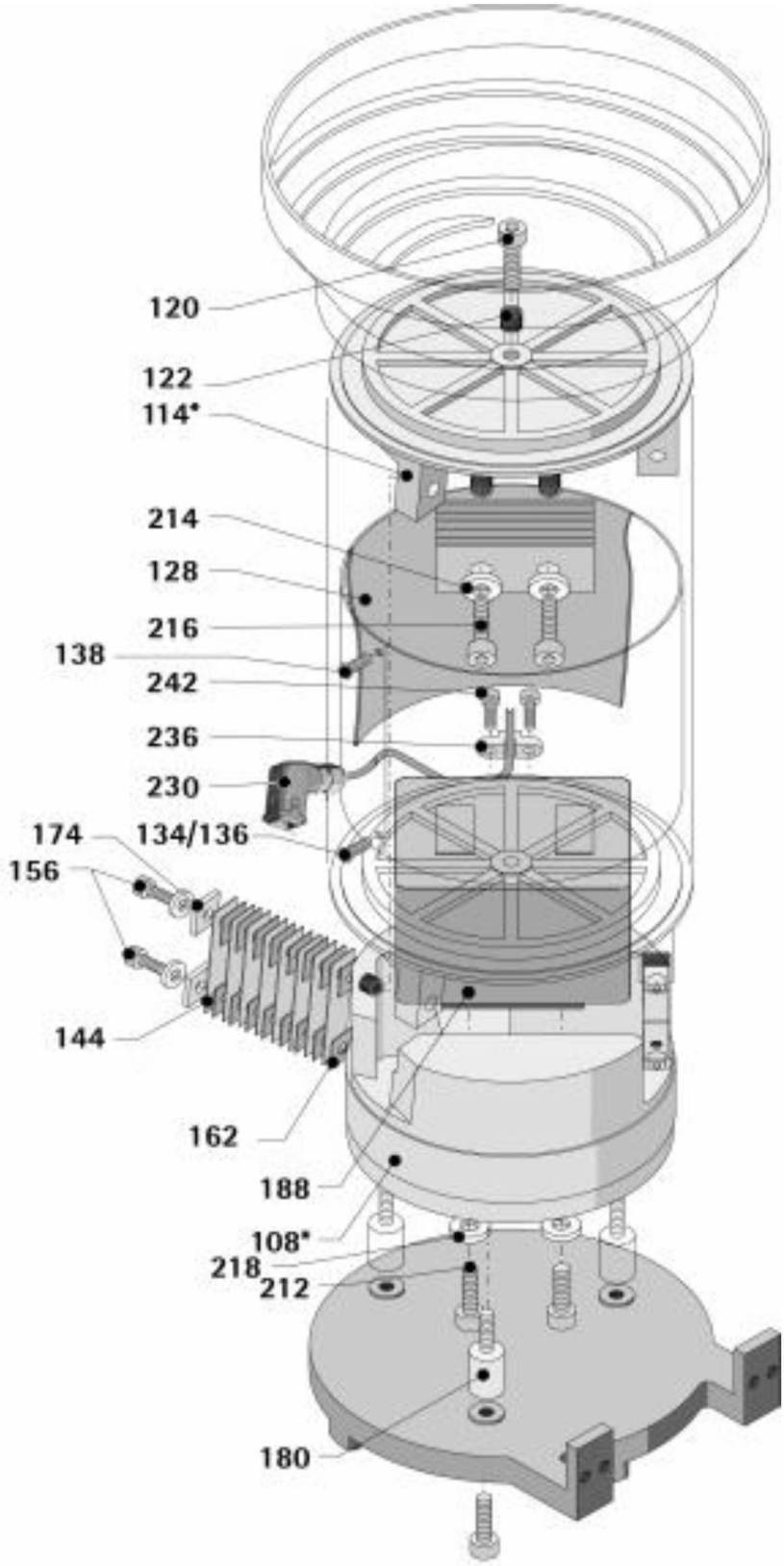

*Please state the feed direction for orders of bowls and drive units.

Parts List Type SRC-N 200

Pos	Designation
108*	Counter-mass
114*	Vibrator Top Casting
120	cyl. Screw M8 x 25
122	Spring Washer
128	Metal Cover
134	cyl. Screw M5 x 10
136	Washer
138	Tapping Screw
144	Leaf Spring Assembly
156	cyl. Screw M8 x 25
162	Endplate

Pos	Designation
174	Clamping Plate
180	Shock Absorber
188	Magnet, armature
212	cyl. Screw M6 x 50
214	Washer
216	cyl. Screw M6 x 45
218	Spring Washer
230	Plug
236	Tension Relief
242	cyl. Screw M4 x 12

4. Bowl Feeders Type SRC-N 250

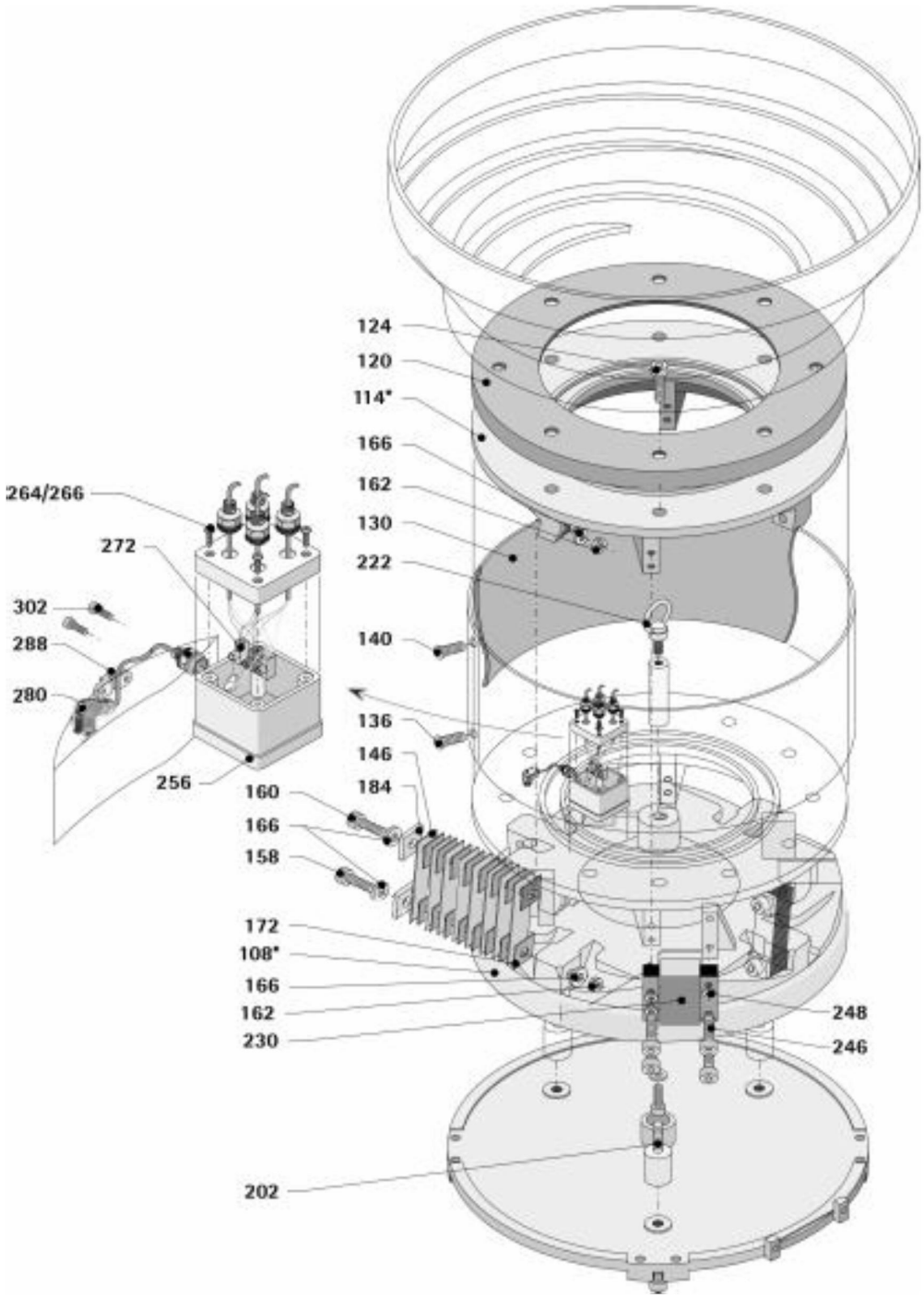

*Please state the feed direction for orders of bowls and drive units.

Parts List Type SRC-N 250

Pos	Designation
108*	Counter-mass
114*	Vibrator Top Casting
120	Cover Ring
124	cyl. Screw M6 x 20
130	Metal Cover
136	Screw M6 x 10
138	Washer
140	Tapping Screw
146	Leaf Spring Assembly
158	cyl. Screw M12 x 45
160	cyl. Screw M12 x 60
162	Nut M12
166	Washer
172	Endplate

Pos	Designation
184	Clamping Plate
202	Shock Absorber
222	Screw
230	Magnet, armature
246	cyl. Screw M6 x 35
248	Washer
256	Connection Housing
264	cyl. Screw M4 x 12
266	Spring Washer
272	Connection (blue, black, green)
280	Plug, cable
288	Tension Relief
302	cyl. Screw M4 x 12

5. Bowl Feeders Type SRC-N 400

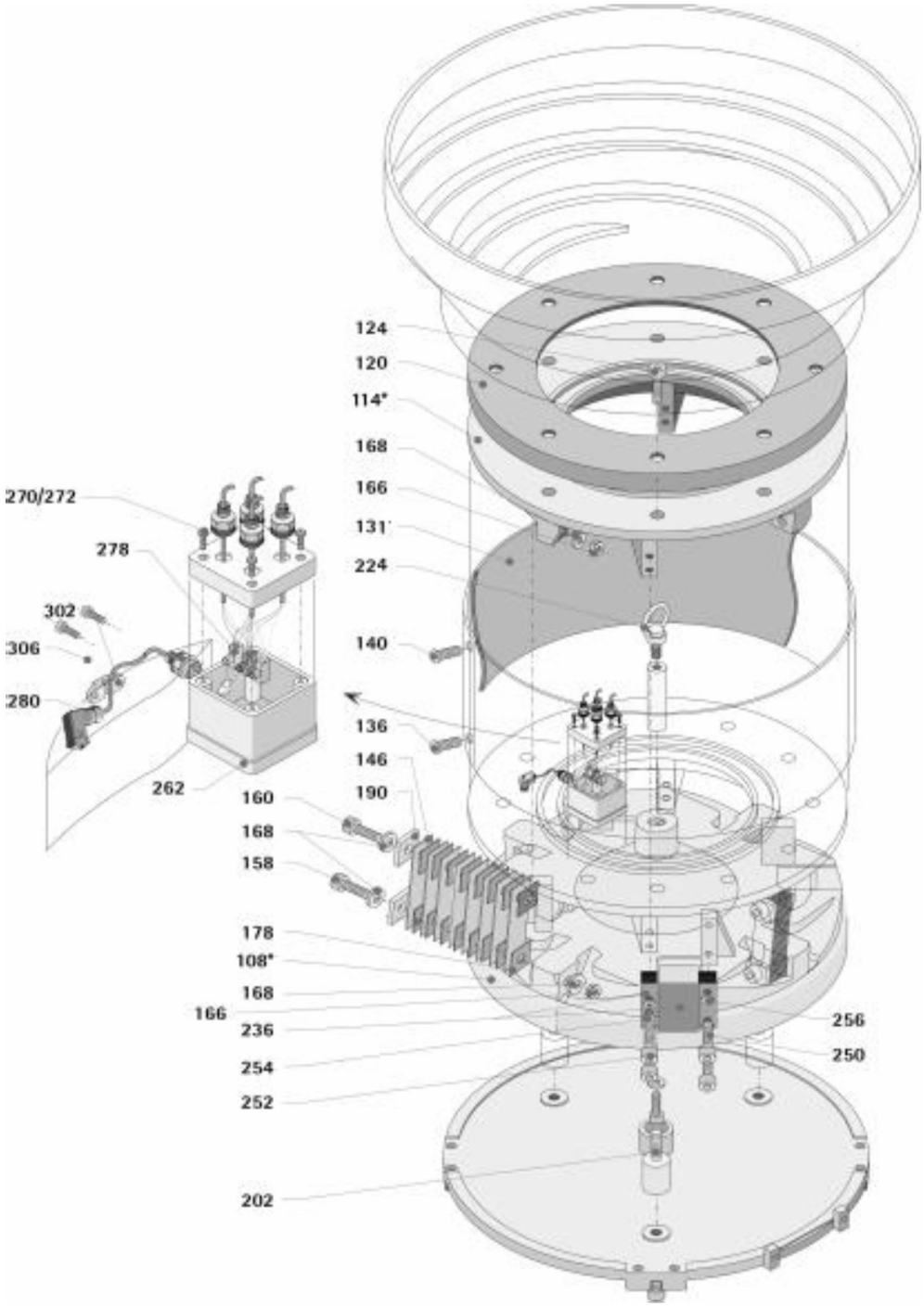

*Please state the feed direction for orders of bowls and drive units.

Parts List Type SRC-N 400

Pos	Designation
108*	Counter-mass
114*	Vibrator Top Casting
120	Cover Ring
124	cyl. Screw M6 x 25
131	Metal Cover
136	Screw M6 x 10
138	Washer
140	Tapping Screw
146	Leaf Spring Assembly
158	cyl. Screw M12 x 55
160	cyl. Screw M12 x 80
166	Nut M12
168	Washer
178	Endplate

Pos	Designation
190	Clamping Plate
202	Shock Absorber
224	Screw
236	Magnet, armature
252	cyl. Screw M6 x 45
254	Washer
256	Washer
262	Connection Housing
270	cyl. Screw M4 x 12
272	Spring Washer
278	Connection (blue, black, green)
280	Plug, cable
302	Tension Relief
306	cyl. Screw M4 x 12

6. Bowl Feeders Type SRC-N 630

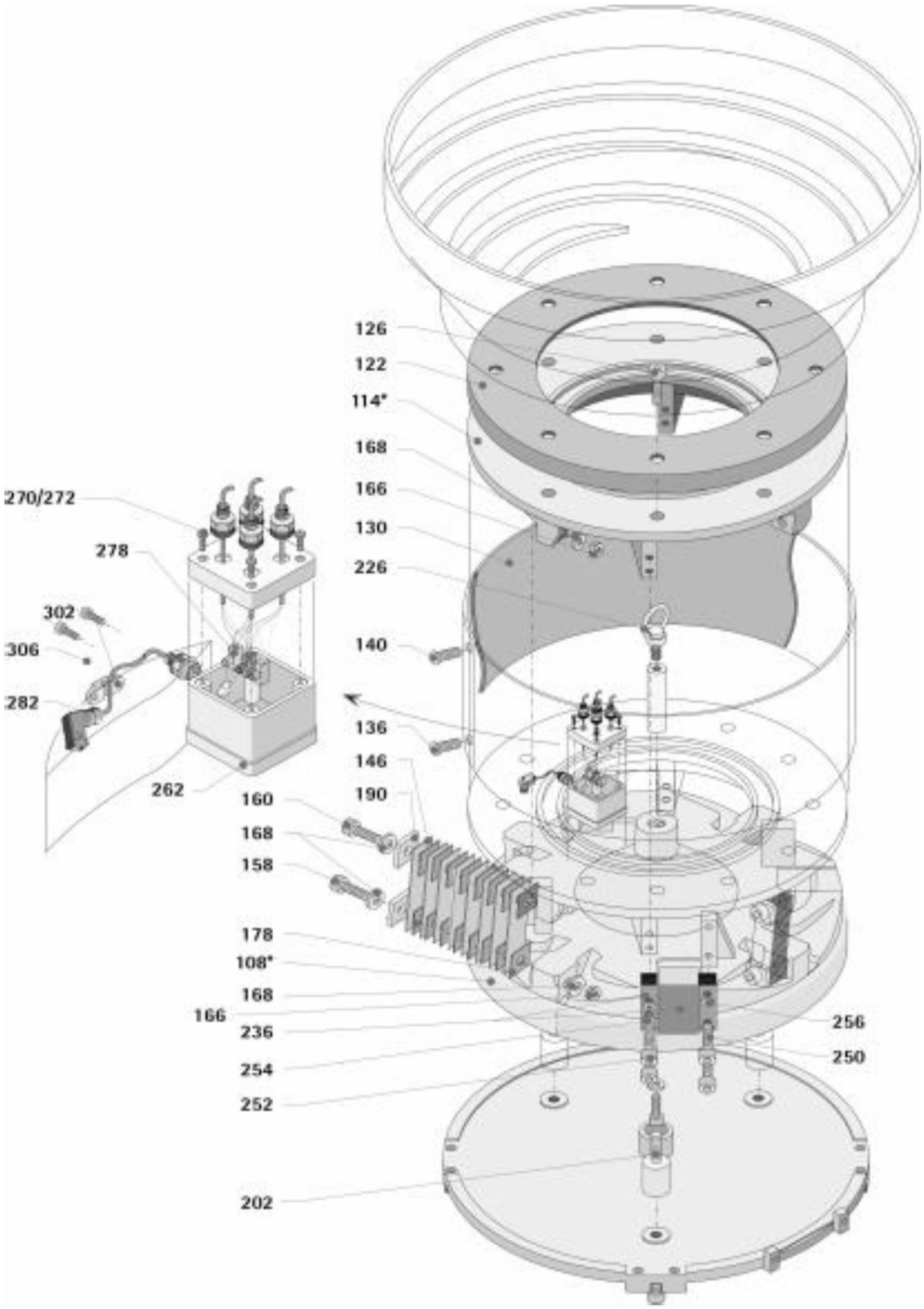

*Please state the feed direction for orders of bowls and drive units.

Parts List Type SRC-N 630

Pos	Designation
108*	Counter-mass
114*	Vibrator Top Casting
122	Cover Ring
126	cyl. Screw M6 x 25
130	Metal Cover
136	Screw M6 x 10
138	Washer
140	Tapping Screw
146	Leaf Spring Assembly
158	cyl. Screw M12 x 55
160	cyl. Screw M12 x 80
166	Nut M12
168	Washer
178	Endplate

Pos	Designation
190	Clamping Plate
202	Shock Absorber
226	Screw
236	Magnet, armature
252	cyl. Screw M6 x 45
254	Washer
256	Washer
262	Connection Housing
270	cyl. Screw M4 x 12
272	Spring Washer
278	Connection (blue, black, green)
282	Plug, cable
302	Tension Relief
306	cyl. Screw M4 x 12

7. Bowl Feeders Type SRC-N 800-1

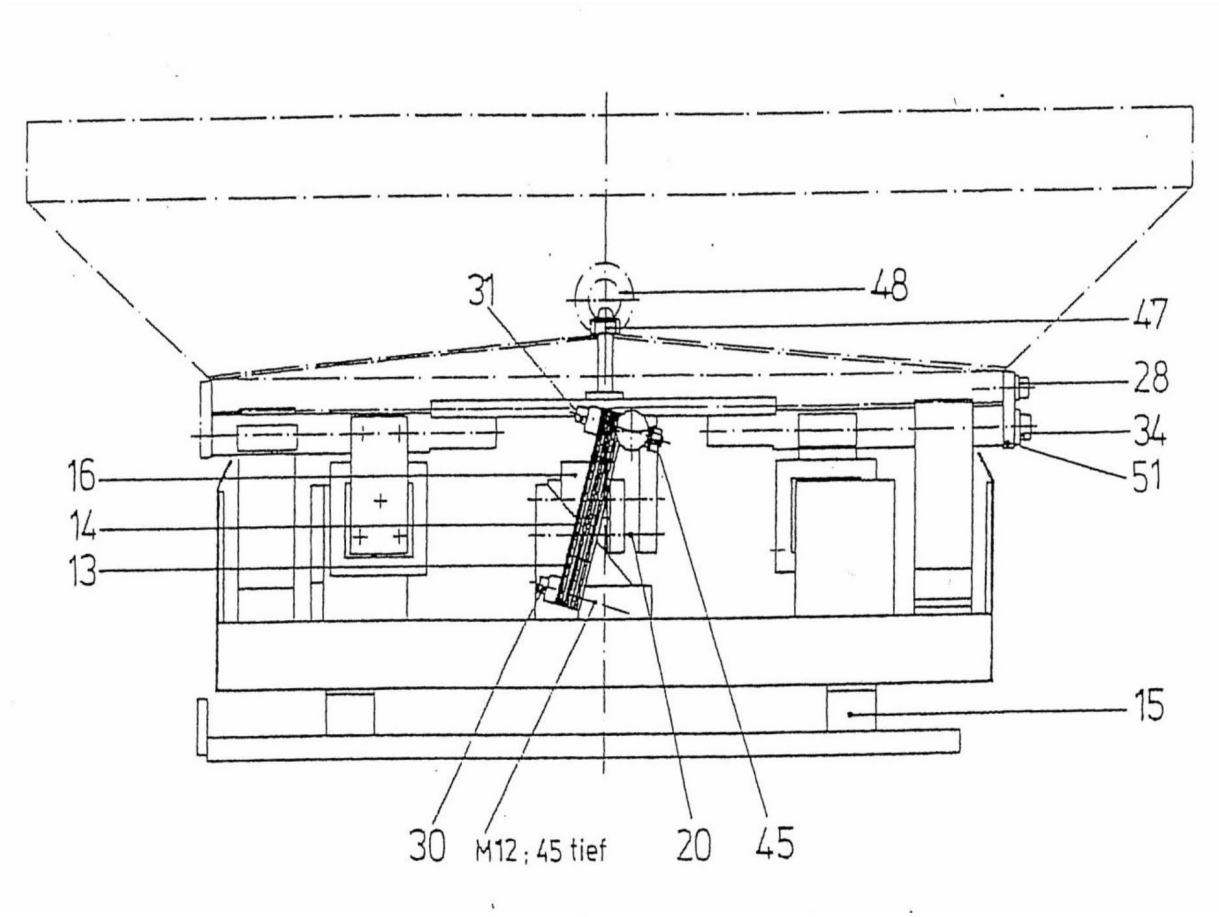

Parts List Type SRC-N 800-1

Pos	Designation
13	Leaf Spring
14	Distance Plate
15	Shock Absorber
20	Pressure Spring
28	Cylinder Head Screw
30	Cylinder Head Screw
31	Cylinder Head Screw
34	Cylinder Head Screw
45	Hexagon Nut

Pos	Designation
47	Cap Nut
48	Ring Nut
51	Bracket for browl fastening (right)
51	Bracket for browl fastening (left)
52	Swing with armature fastening (right)
52	Swing with armature fastening (left)
52	Swing without armature fastening (right)
52	Swing without armature fastening (left)

7. Bowl Feeders Type SRHL 400

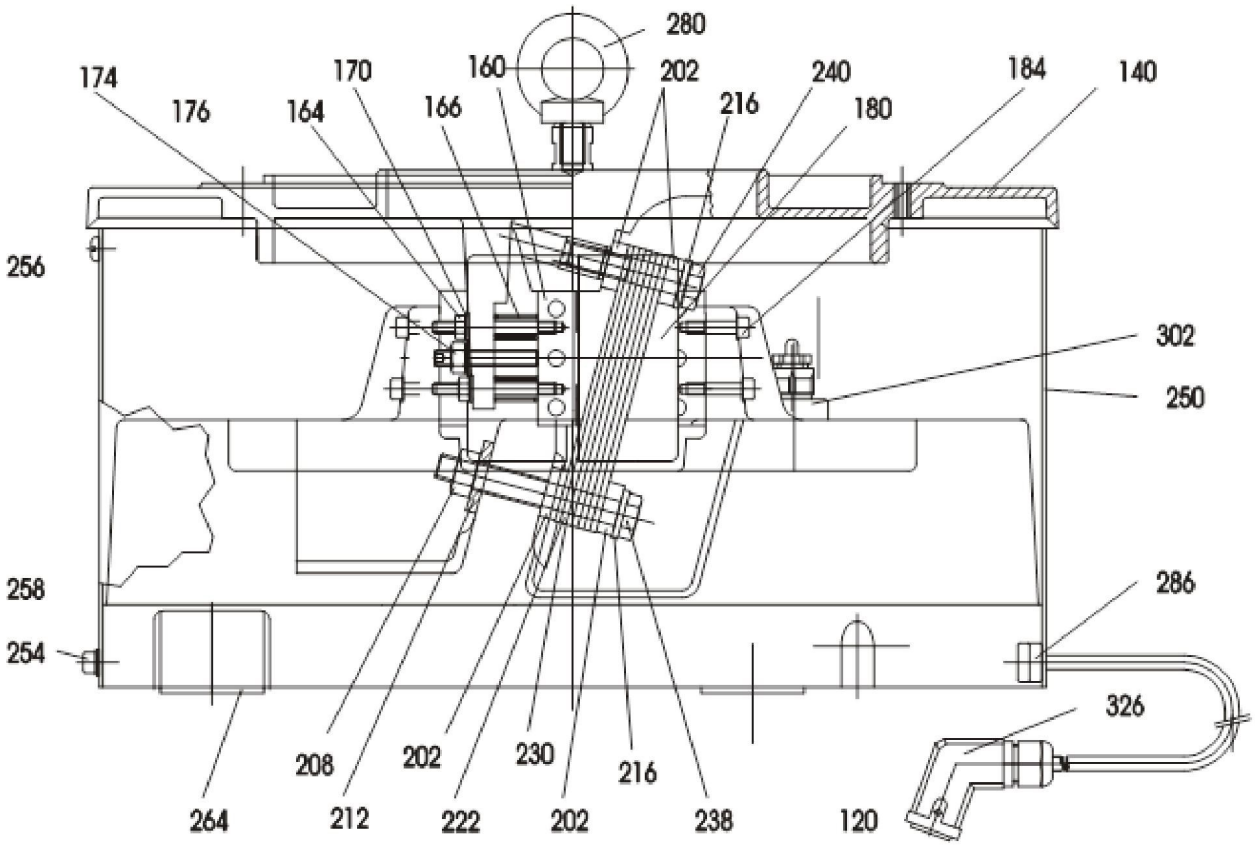

Parts List Type SRHL 400

Pos	Designation
140	Vibrator Top Casting
160	Anchor Plate
174	Hexagon Nut
166	Compression Spring
176	Washer
180	Magnet / Coil
254	cyl. Screw
202	Clamping Plate
222	Leaf Spring

Pos	Designation
240	Hexagon Head Cap Screw
250	Metal Cover
256	Tapping Screw
264	Shock Absorber
280	Screw
286	Tension Relief
302	Connection Housing
326	Plug, cable

RNA Automation Ltd
Unit C Castle Bromwich Business Park, Tameside Drive, Birmingham B35 7AG, UK
Tel: +44 (0)121 749 2566 • Fax: +44 (0)121 749 6217
Email: sales@rnaautomation.com • Web: www.rnaautomation.com